REVISIONS				
ECN	REV.	DESCRIPTION	DATE	APPROVED
	1	ADDED TOLERANCE TO 3.70" & 22.691" DIMENSION - UPDATED DRAWING TEMPLATE TO HJI	12/1/2008	DB
HJ10-154	2	MATERIAL WAS "CYCLOALIPHATIC EPOXY".	9/21/2010	EDZ

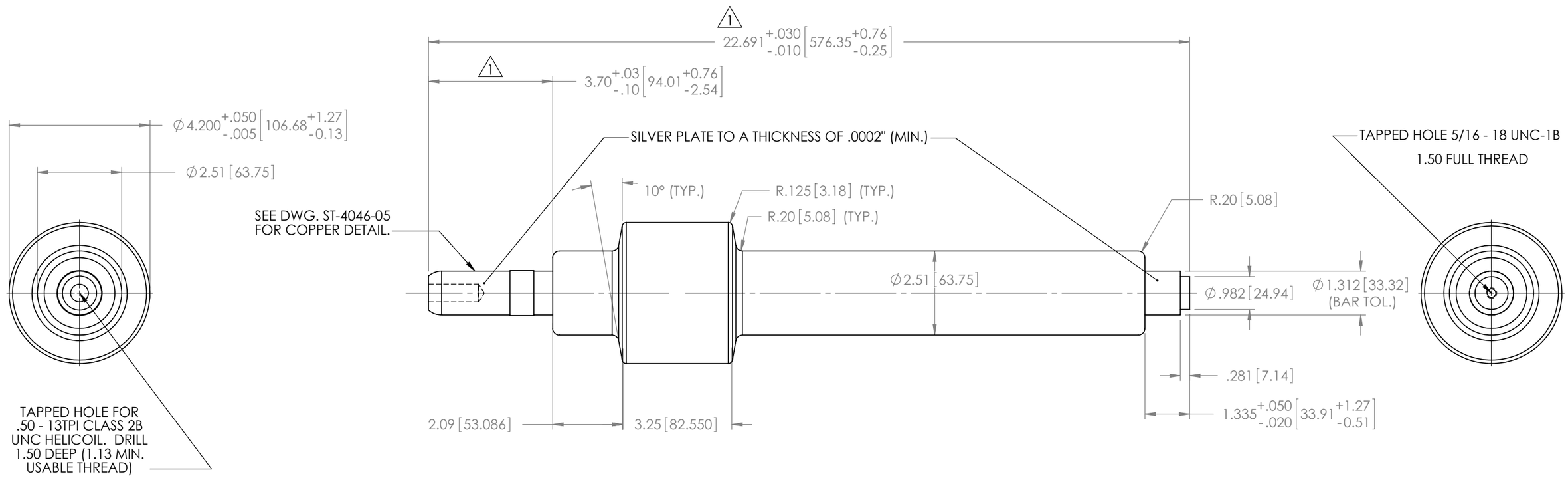

NOTES:
1. ALL CONTACT SURFACES TO BE CLEAN & FREE FROM FLASH

MATERIAL:
2 1. E04 - INDOOR EPOXY SYSTEM, GREY.
2. HD ETP CU, C11000 GRADE COPPER, SILVER PLATED

SPECIFICATIONS:
1. MANUFACTURED IN ACCORDANCE WITH ..... IEC 137:1995
2. RATED VOLTAGE 38kV
3. POWER FREQUENCY WITHSTAND 80kV
4. BASIC IMPULSE LEVEL 170KV
5. PARTIAL DISCHARGE ..... 22KV < 10pC, 40KV < 100pC
6. NOMINAL CURRENT RATING ..... 1250 AMPS
7. TEMPERATURE CLASSIFICATION..... -5°C INDOOR

PROPRIETARY AND CONFIDENTIAL

THE INFORMATION CONTAINED IN THIS DRAWING IS THE SOLE PROPERTY OF H-J INTERNATIONAL, INC. ANY REPRODUCTION IN PART OR AS A WHOLE WITHOUT THE WRITTEN PERMISSION OF H-J INTERNATIONAL, INC. IS STRICTLY PROHIBITED.

BREAK ALL SHARPS UNLESS OTHERWISE NOTED

TOLERANCES (EXCEPT AS NOTED)

ONE PLACE MM	±1.50
TWO PLACE MM	±0.75
TWO PLACE DEC.	±.020
THREE PLACE DEC.	±.010
FRACTIONS	± 1/16"
ANGLES	2°

QUALITY PRODUCTS INTERNATIONAL REPUTATION

APPROVED BY	DB	DATE	11/19/2000
CHECKED BY	RM	DATE	11/19/2000
DRAWN BY	DB	DATE	11/19/2000
TOOL NO.		T18-001-0	
PRODUCT GRP.		1800 SERIES	

H–J INTERNATIONAL, INC.
3010 HIGH RIDGE BLVD. HIGH RIDGE, MO. 63049 USA
PHONE 1–636–677–3421 FAX 1–636–376–1915

W-VAC V.C.B. (38kV)

BOTTOM CONDUCTOR BUSHING ASSY. - 1250A

(EATON P/N 4D13616G02)

DRAWING NO. 18–001–001

SCALE	SIZE	REV.	SHEET	OF
1:3	B	2	1	1